Front Passenger Side Seat Belt Warning Light Malfunction

WIRING DIAGRAM

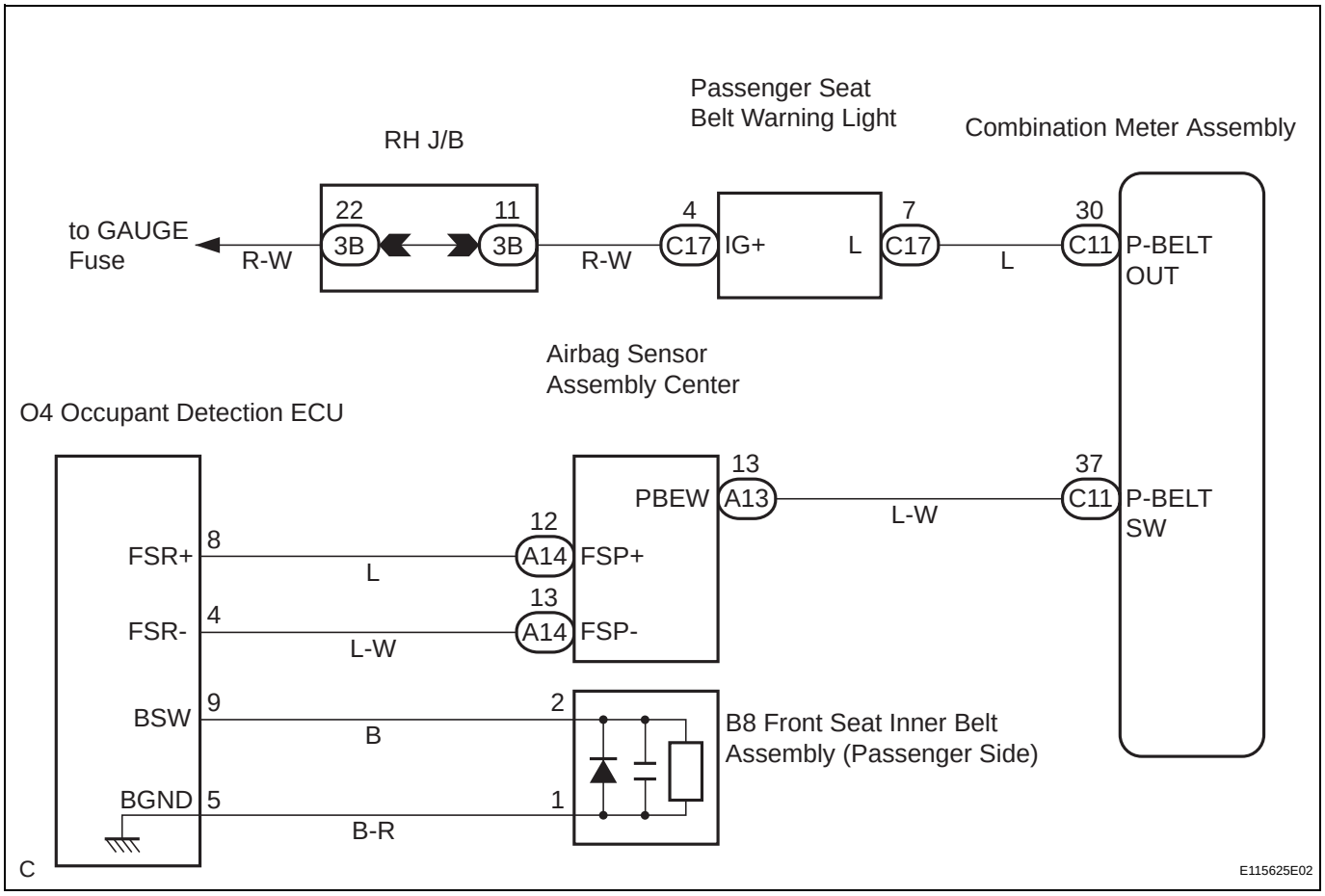

INSPECTION PROCEDURE

1	INSPECT COMBINATION METER ASSEMBLY

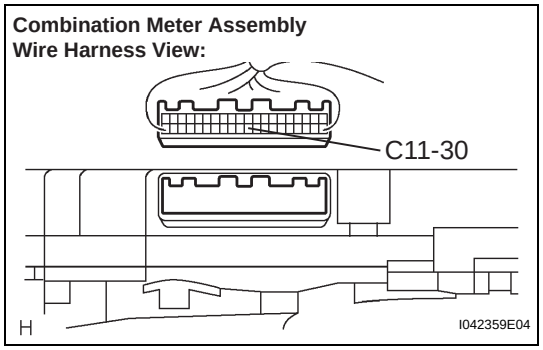

(a) Disconnect the C11 connector.
(b) Measure the resistance according to the value(s) in the table below.

Standard voltage

Tester connection	Condition	Specified condition
C11-30 - Body ground	Ignition switch ACC or ON	10 to 14 V

NG → **Go to step 2**

OK

ME
cardiagn.com

2 INSPECT PASSENGER SEAT BELT WARNING LIGHT

Connector Front View:

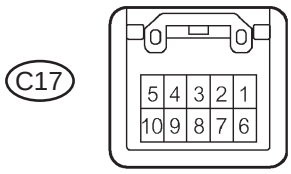

H I043086E01

(a) Remove the passenger seat belt warning light with connectors still connected.
(b) Measure the voltage according to the value(s) in the table below.
Standard voltage

Tester connection	Condition	Specified condition
C17-4 - C17-7	Sit on the passenger seat and turn the ignition switch to the ON position	8 to 12 V

NG → **REPLACE PASSENGER SEAT BELT WARNING LIGHT**

OK

ME

3 CHECK HARNESS AND CONNECTOR (COMBINATION METER - PASSENGER SEAT BELT WARNING LIGHT)

Wire Harness View:

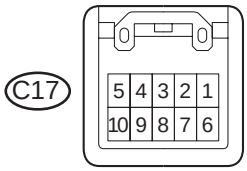

Combination Meter Assembly Wire Harness View:

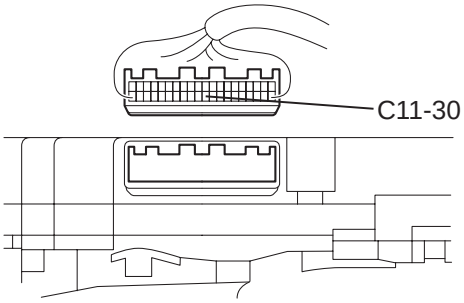

C E115626E04

(a) Disconnect the C17 and C11 connectors.
(b) Measure the resistance according to the value(s) in the table below.
Standard resistance

Tester connection	Condition	Specified condition
C17-7 - C11-30	Always	Below 1 Ω
C11-30 - Body ground	Always	10 kΩ or higher

NG → **REPAIR OR REPLACE HARNESS OR CONNECTOR**

OK

REPAIR OR REPLACE HARNESS OR CONNECTOR (GAUGE FUSE CIRCUIT)

cardiagn.com

4 INSPECT COMBINATION METER ASSEMBLY

Combination Meter Assembly Wire Harness View:

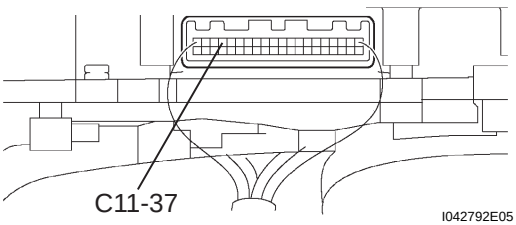

(a) Remove the combination meter assembly with connectors still connected.

(b) Measure the voltage according to the value(s) in the table below.

Standard voltage

Tester connection	Condition	Specified condition
C11-37 - Body ground	Indicator light ON (P-BELT) → OFF	Below 1 V → 10 to 14 V

NG → **REPLACE COMBINATION METER ASSEMBLY**

OK

5 INSPECT FRONT SEAT INNER BELT ASSEMBLY (for Front Passenger Side)

Front Seat Inner Belt Assembly (for Front Passenger Side) Connector Front View:

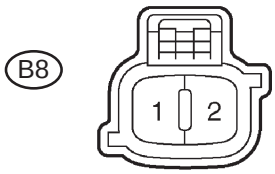

(a) Remove the front seat inner belt assembly (for front passenger side) with connectors still connected.

(b) Measure the voltage according to the value(s) in the table below.

Standard voltage

Tester connection	Condition	Specified condition
C11-37 - Body ground	Turn the ignition switch to the ON position	10 to 14 V

NG → **REPLACE FRONT SEAT INNER BELT ASSEMBLY (for Front Passenger Side)**

OK

6 INSPECT OCCUPANT DETECTION ECU

Occupant Detection ECU:

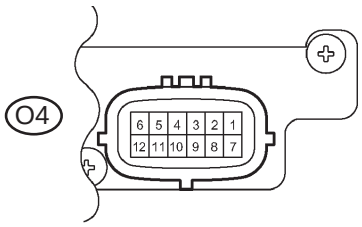

(a) Measure the resistance according to the value(s) in the table below.

Standard resistance

Tester connection	Condition	Specified condition
O4-5 - Body ground	Always	Below 1 Ω

cardiagn.com

Occupant Detection ECU Wire Harness View:

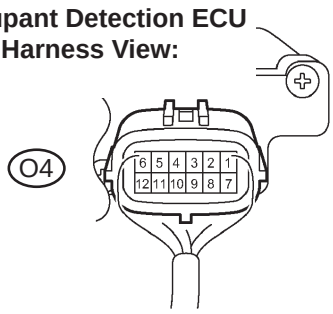

(b) Measure the voltage according to the value(s) in the table below.

Standard voltage

Tester connection	Condition	Specified condition
O4-9 - Body ground	Seat belt is fastened	8 to 11 V
O4-9 - Body ground	Seat belt is unfastened	3 to 4.5 V

NG → **REPLACE OCCUPANT DETECTION ECU**

OK

7 CHECK HARNESS AND CONNECTOR (OCCUPANT DETECTION ECU - FRONT SEAT INNER BELT ASSEMBLY)

Front Seat Inner Belt Assembly (Passenger side) Connector Front View:

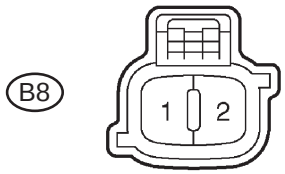

Occupant Detection ECU Connector Front View:

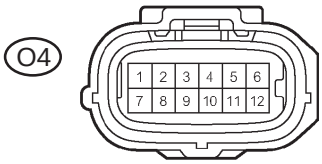

(a) Disconnect the O4 and B8 connectors.
(b) Measure the resistance according to the value(s) in the table below.

Standard resistance

Tester connection	Condition	Specified condition
B8-2 - O4-9	Always	Below 1 Ω
B8-1 - O4-5	Always	Below 1 Ω
B8-2 - Body ground	Always	10 kΩ or higher
B8-1 - Body ground	Always	10 kΩ or higher

NG → **REPAIR OR REPLACE HARNESS OR CONNECTOR**

OK

ME

cardiagn.com

8	CHECK HARNESS AND CONNECTOR (CENTER AIRBAG SENSOR ASSEMBLY - OCCUPANT DETECTION ECU)

Center Airbag Sensor Assembly Wire Harness View:

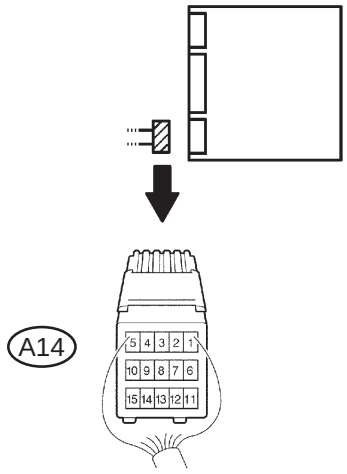

Occupant Detection ECU Connector Front View:

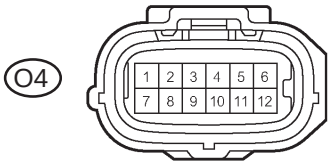

H

I042577E02

(a) Disconnect the O4 and A14 connectors.
(b) Measure the resistance according to the value(s) in the table below.

Standard resistance

Tester connection	Condition	Specified condition
A14-12 - O4-8	Always	Below 1 Ω
A14-13 - O4-4	Always	Below 1 Ω
A14-12 - Body ground	Always	10 kΩ or higher
A14-13 - Body ground	Always	10 kΩ or higher

MG → **REPAIR OR REPLACE HARNESS OR CONNECTOR**

OK

REPAIR OR REPLACE HARNESS OR CONNECTOR (CENTER AIRBAG SENSOR ASSEMBLY - COMBINATION METER CIRCUIT)

cardiagn.com